CA-Series

CA-Series
Single Curve with Tangent Straights Conveyors

SpanTech

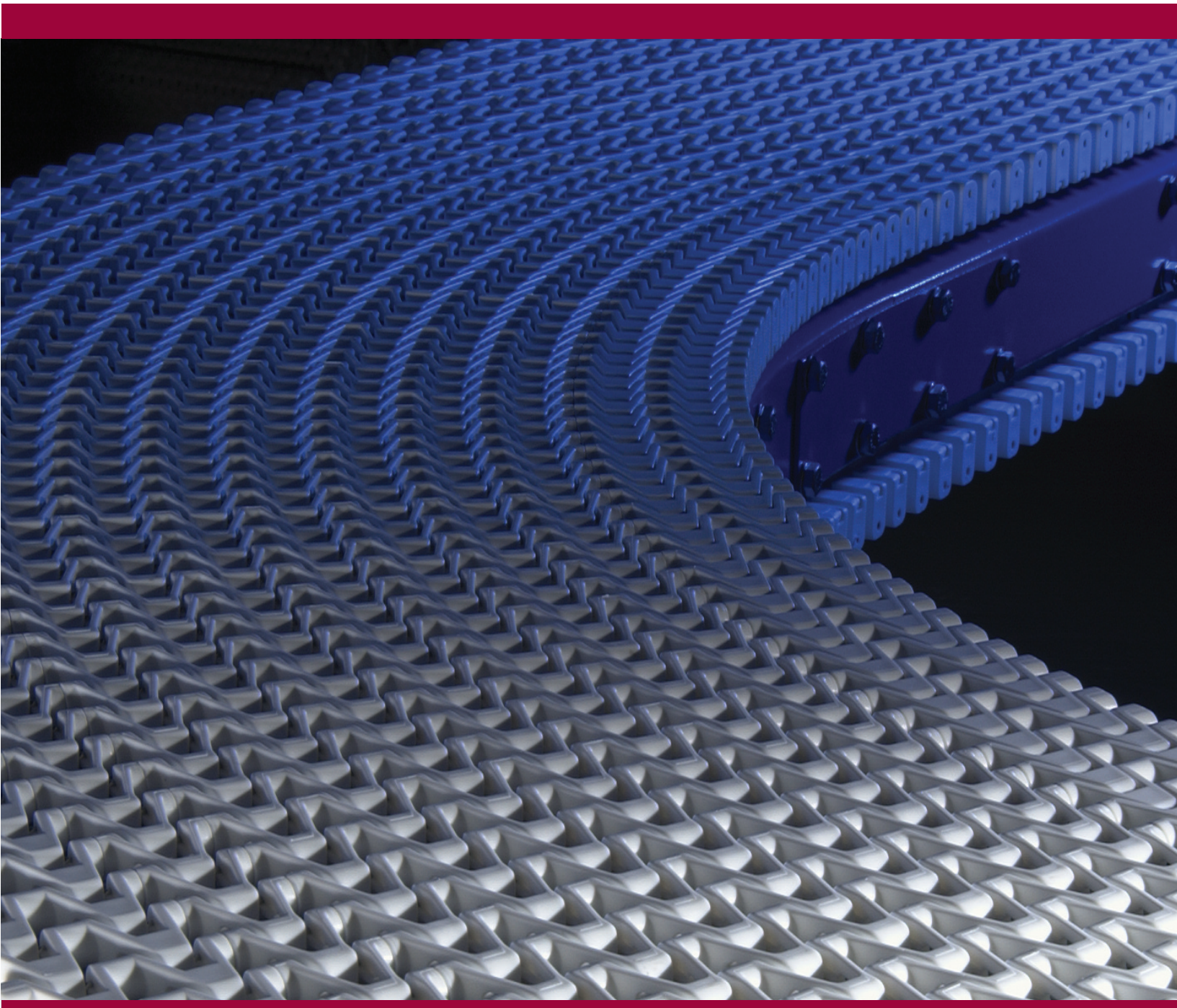

your Material Handling Specialist

TAYLOR
MATERIAL HANDLING & CONVEYOR
Phone: 419-867-3560
www.taylormhc.com

CA-Series

Flexibility in turning radius and straight length in a modular design. Engineered for long life and nearly maintenance-free operation.

The Span Tech CA-Series curving with straight section conveyors allow custom design to fit various layouts. There are three choices of turning radius and varying overall straight length coming out of the curve. They provide dependable, nearly maintenance free operation and are virtually silent while operating.

Features & Benefits:

- *Six (6) belt widths available for a variety of applications*
- *Choose between 30-, 45-, and 90-degree curves*
- *Speed range of 5 to 75 feet per minute (1.5 to 22.9 meters per minute) Custom speed ranges available*
- *Increased load carrying capacity over a belt style conveyor*
- *Durable acetal chain provides long life, is completely self tracking, and is nearly silent running*
- *Two-piece drive and idler sprockets for ease of replacement without shaft removal*
- *Non-corroding stainless steel drive shaft and idler shaft*
- *Non-corroding stainless steel fasteners*
- *Nominal top of chain ranges from 22 inches (558.8mm) to 84 inches (2133mm).*
- *SpanLon wear strip and center support rail provide long-wearing, silent operation*
- *See individual models for minimum product size capability*
- *There are no "take ups" with Span Tech conveyors, as there are with belt conveyors*

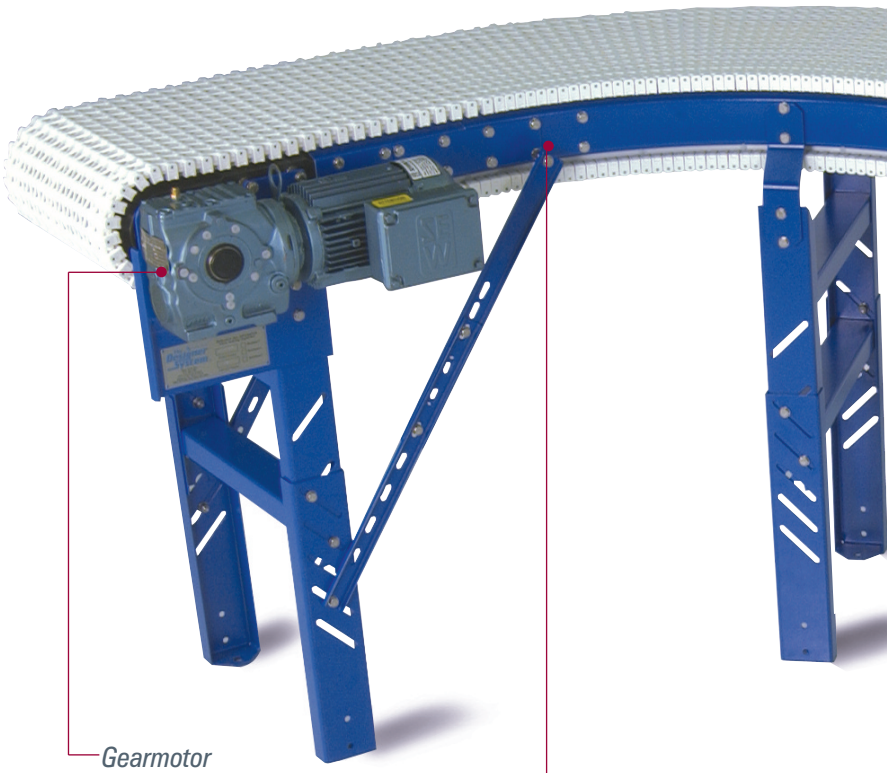

Gearmotor

SEW Eurodrive S Series Shaft Mounted Helical Worm Drive, 230 or 460 volt (3 phase) operation

Conveyor framing

Base material is steel, coated with blue epoxy powder coat paint for a long lasting finish

TAYLOR
MATERIAL HANDLING & CONVEYOR
Phone: 419-867-3560
www.taylormhc.com

SpanTech

Conveyor Chain

White, acetal plastic with stainless steel hinge rods for long life

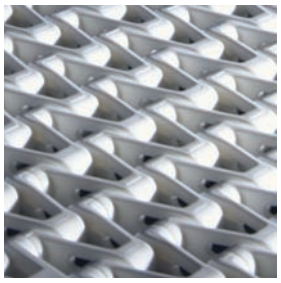

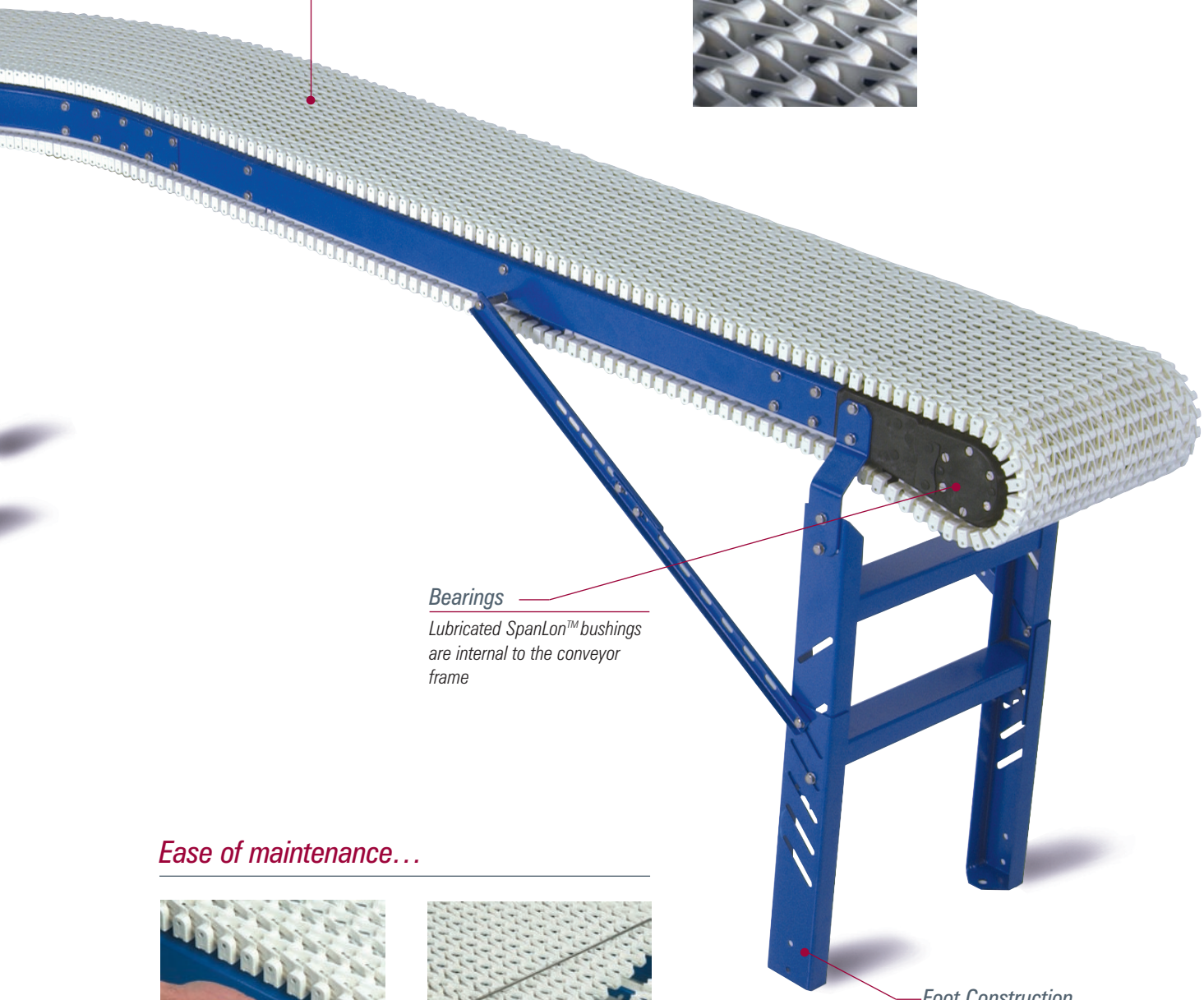

Bearings

Lubricated SpanLon™ bushings are internal to the conveyor frame

Foot Construction

Steel flange for easy anchoring

Ease of maintenance…

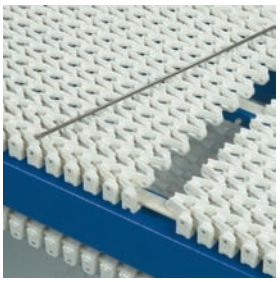

Chain can be taken apart at any link

TAYLOR MATERIAL HANDLING & CONVEYOR
Phone: 419-867-3560
www.taylormhc.com

Span Tech – Your Material Handling Specialist

CA-PLN

CA-PLN Plain Chain

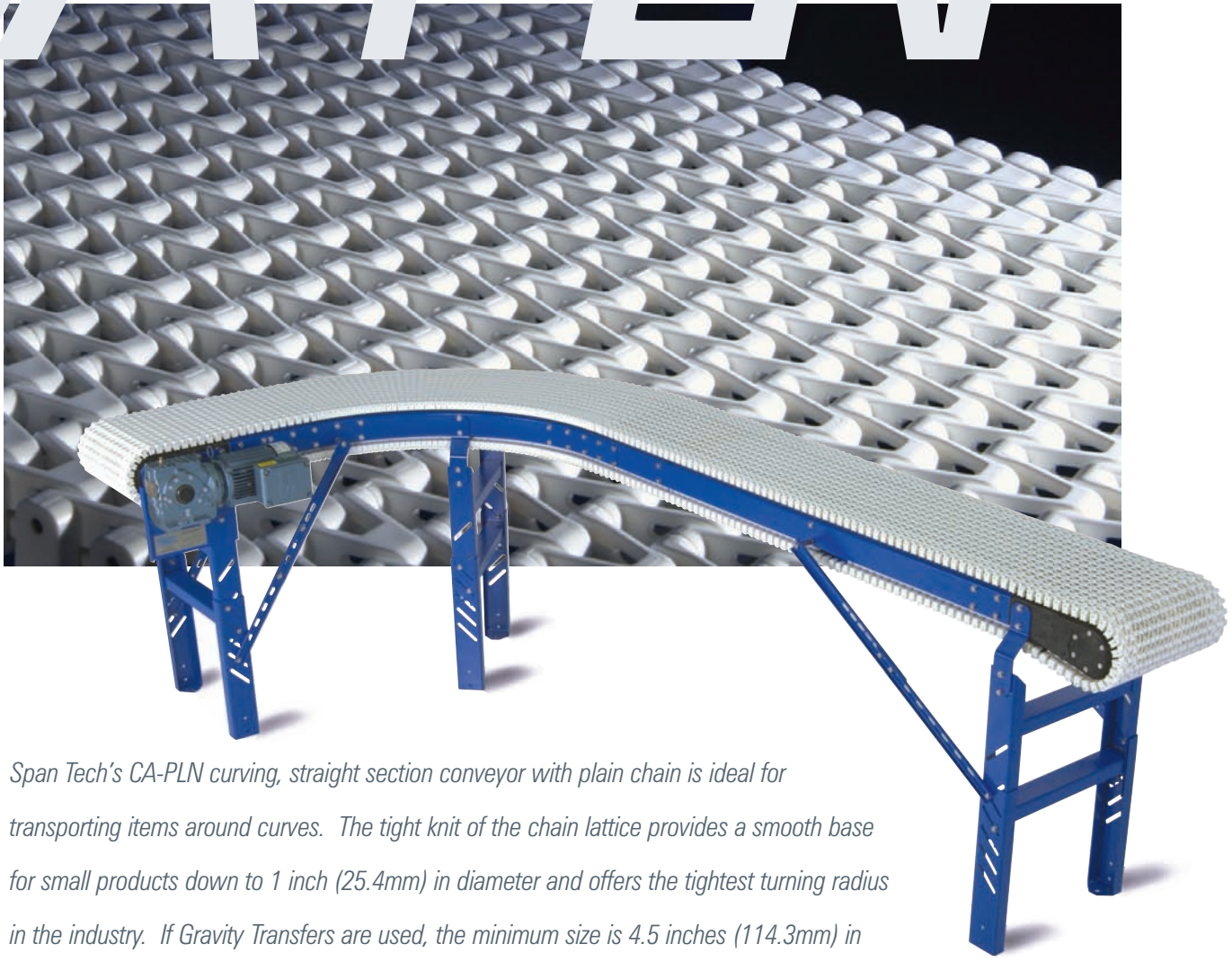

Span Tech's CA-PLN curving, straight section conveyor with plain chain is ideal for transporting items around curves. The tight knit of the chain lattice provides a smooth base for small products down to 1 inch (25.4mm) in diameter and offers the tightest turning radius in the industry. If Gravity Transfers are used, the minimum size is 4.5 inches (114.3mm) in diameter. The transfer is set to a decline angle of approximately 6°.

TAYLOR
MATERIAL HANDLING & CONVEYOR
Phone: 419-867-3560
www.taylormhc.com

Ideal for...

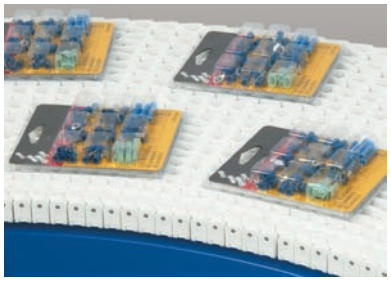

Order filling

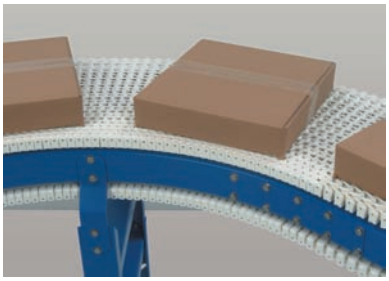

Carton transporting

End-to-end transfers

Span Tech – Your Material Handling Specialist

CA-PLN Specifications

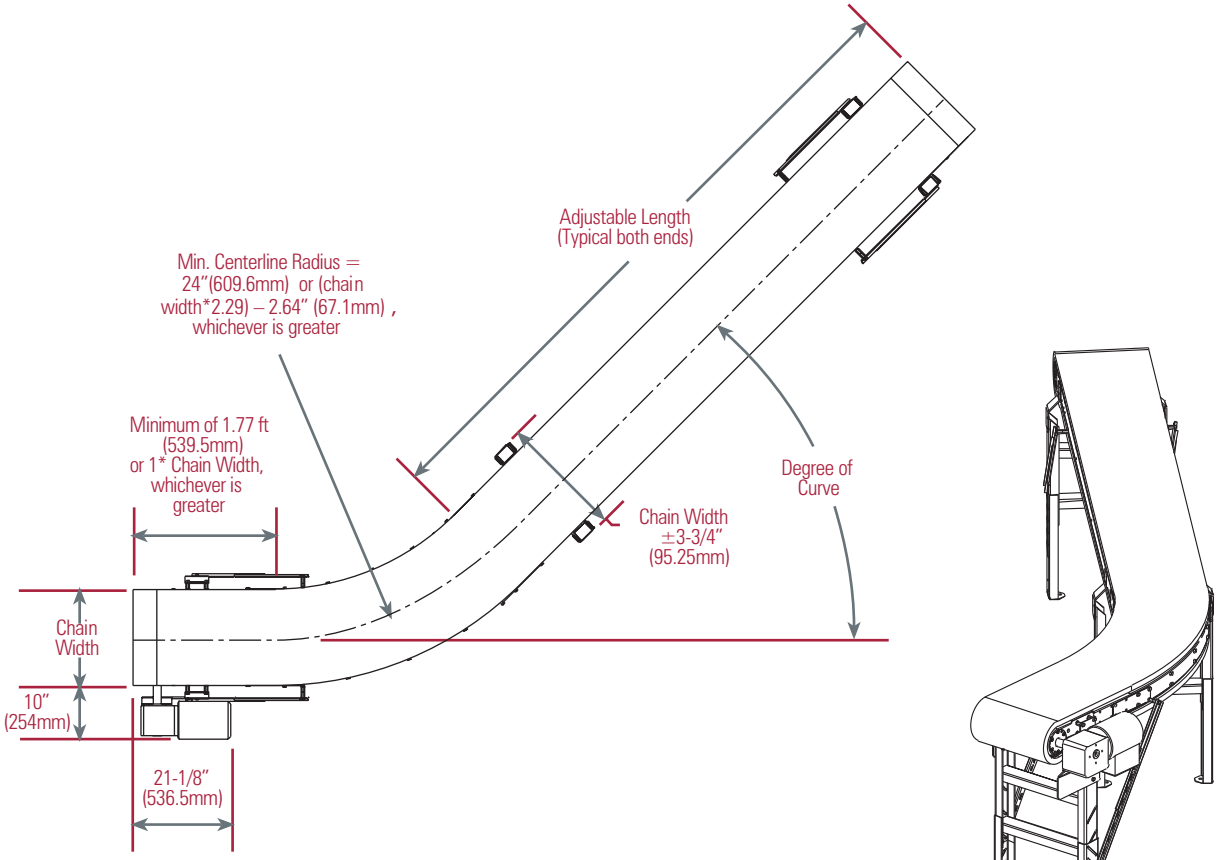

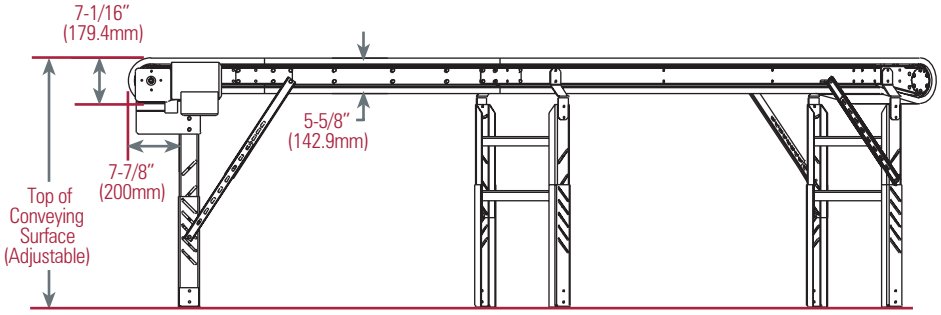

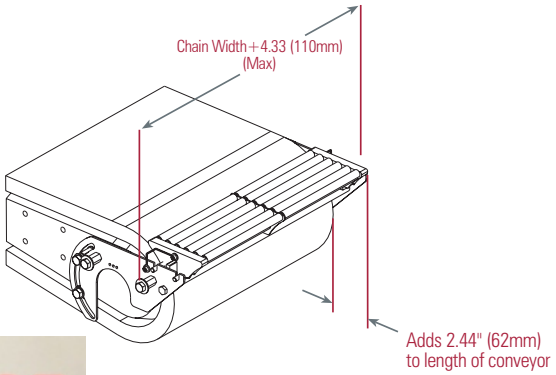

Drive Hand Location

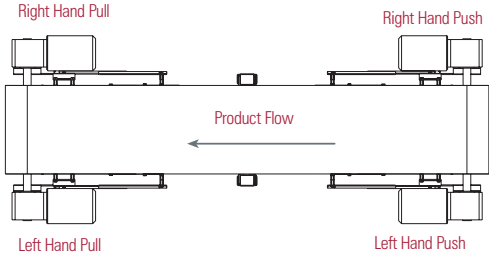

Note: *Regardless of drive position the conveyor will run in either direction.*

TAYLOR
MATERIAL HANDLING & CONVEYOR
Phone: 419-867-3560
www.taylormhc.com

CA-RAS

CA-RAS Raised Chain

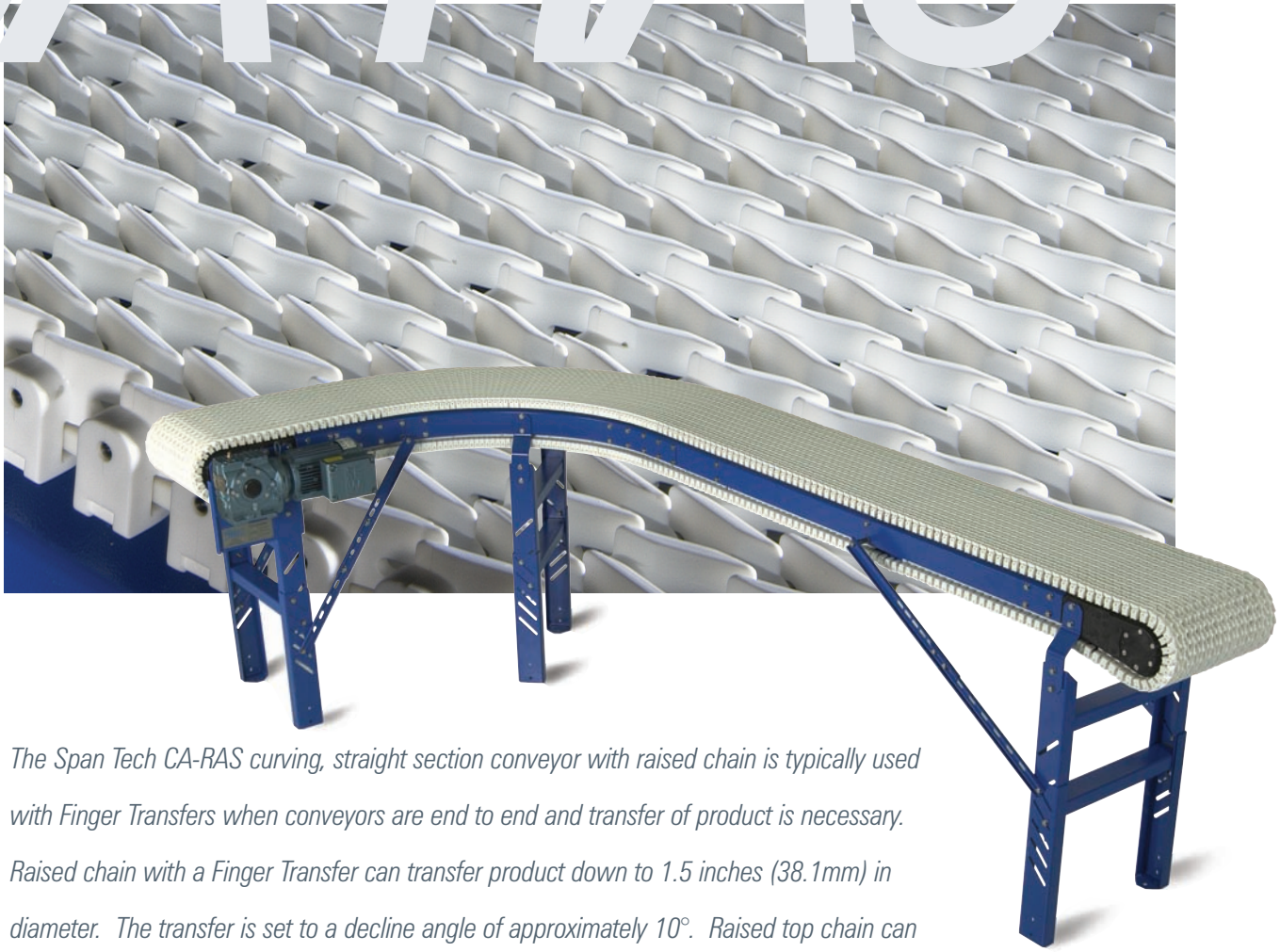

The Span Tech CA-RAS curving, straight section conveyor with raised chain is typically used with Finger Transfers when conveyors are end to end and transfer of product is necessary. Raised chain with a Finger Transfer can transfer product down to 1.5 inches (38.1mm) in diameter. The transfer is set to a decline angle of approximately 10°. Raised top chain can also be used to reduce the amount of contact between the chain and the product being transported, increasing airflow.

TAYLOR
MATERIAL HANDLING & CONVEYOR
Phone: 419-867-3560
www.taylormhc.com

Ideal for...

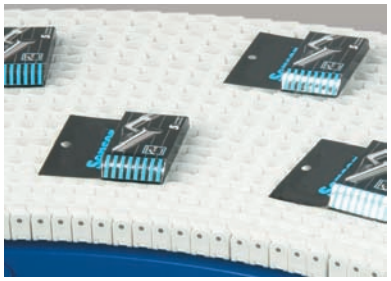

Delicate packaging

Small products where end-to-end transfer is needed

End-to-end transfers

CA-RAS Specifications

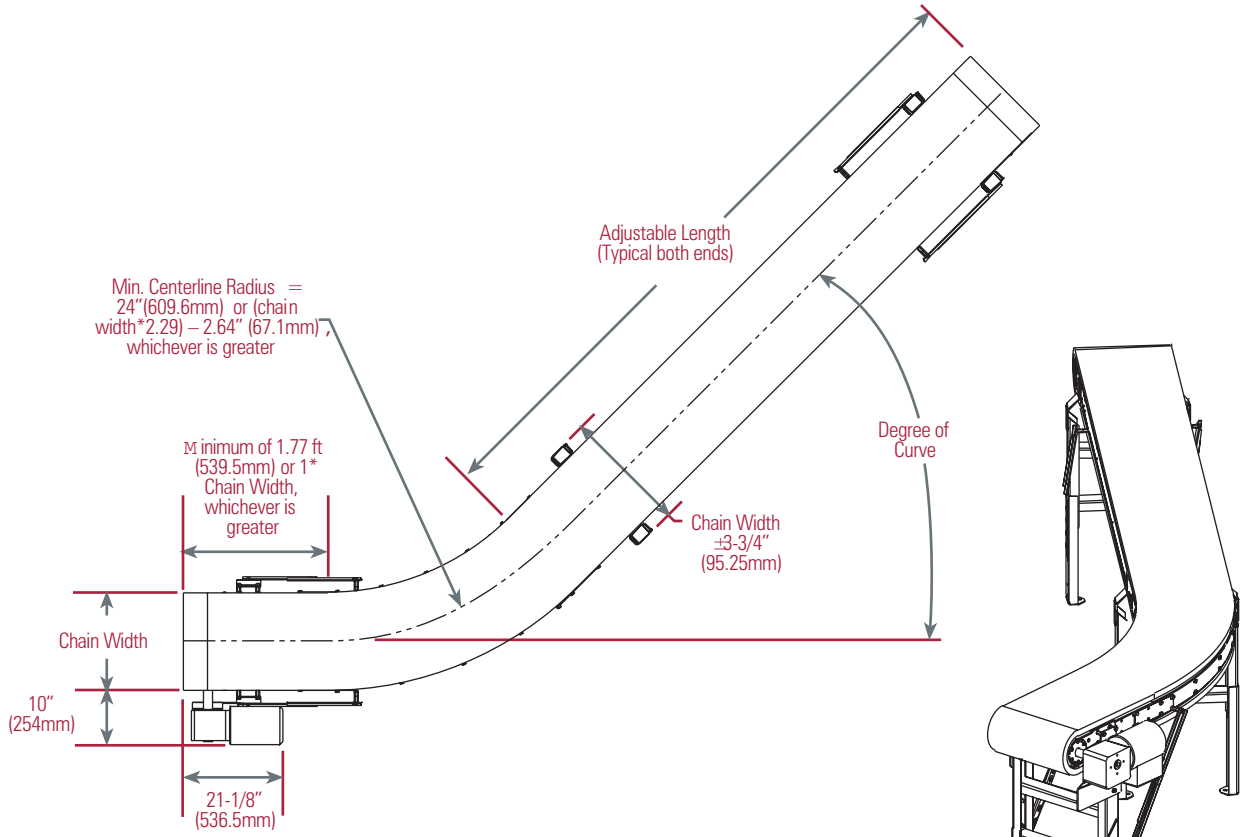

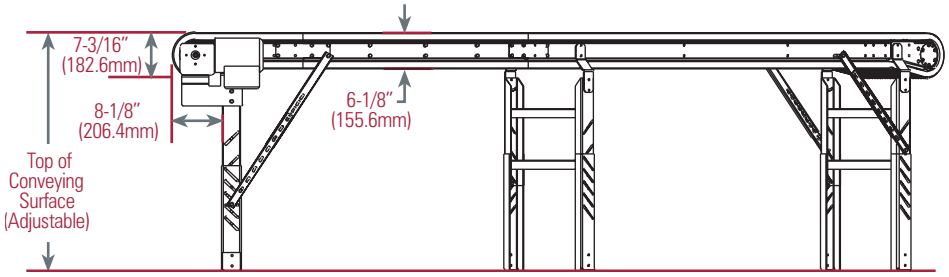

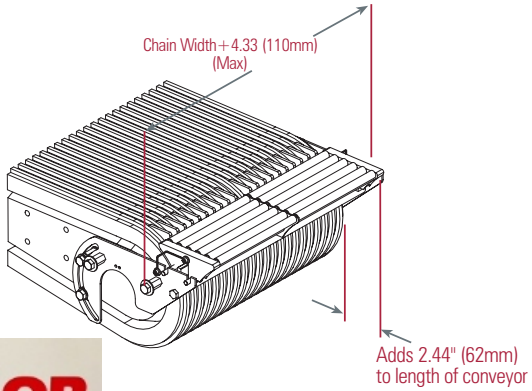

Drive Hand Location

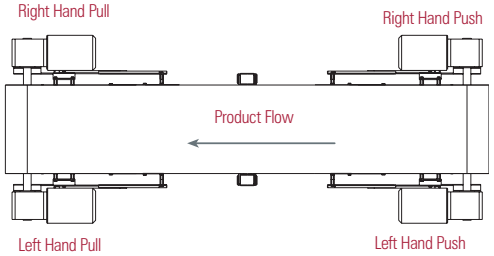

Note: *Regardless of drive position the conveyor will run in either direction.*

TAYLOR
MATERIAL HANDLING & CONVEYOR
Phone: 419-867-3560
www.taylormhc.com

CA-MSG

CA-MSG Moving Side Guide Chain

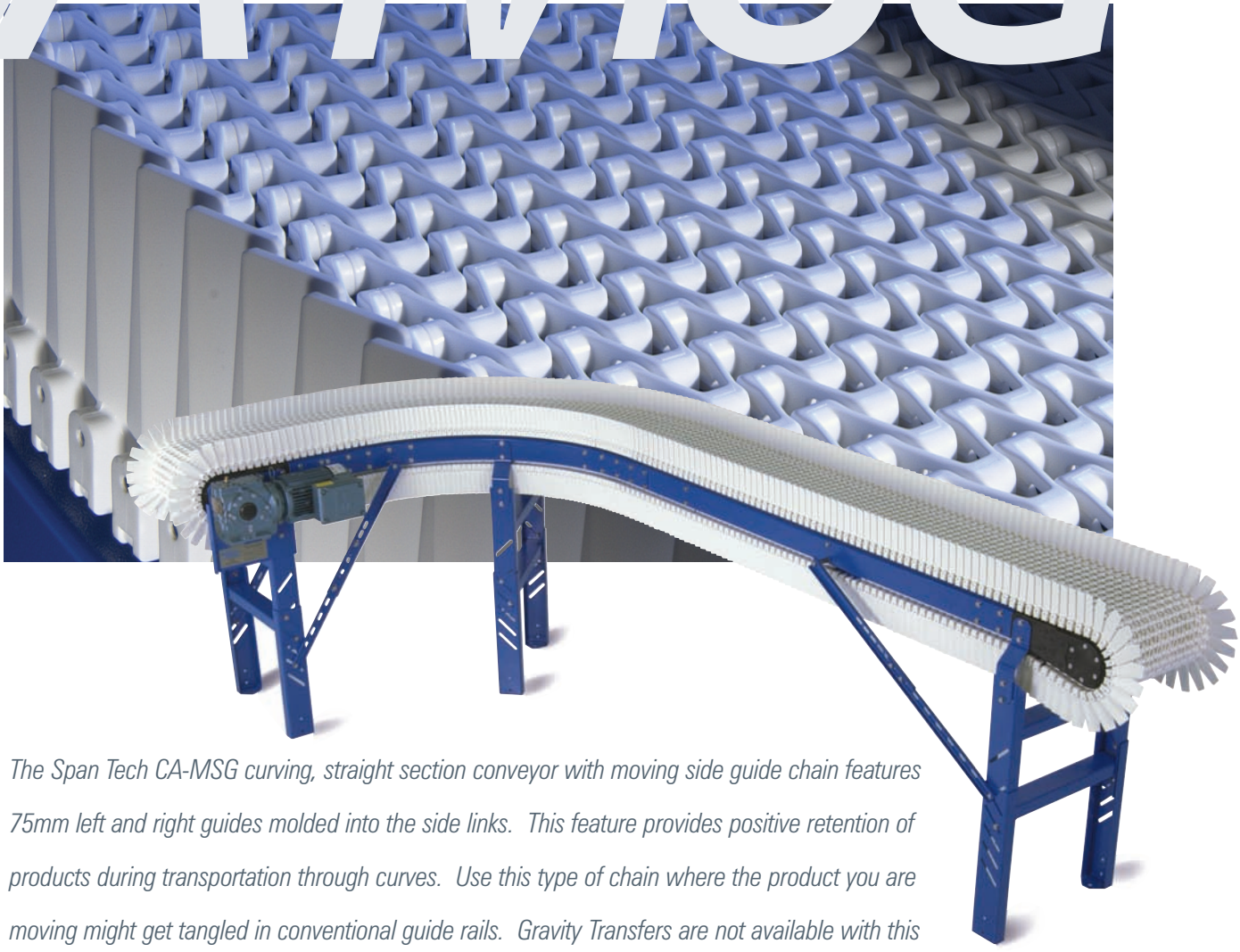

The Span Tech CA-MSG curving, straight section conveyor with moving side guide chain features 75mm left and right guides molded into the side links. This feature provides positive retention of products during transportation through curves. Use this type of chain where the product you are moving might get tangled in conventional guide rails. Gravity Transfers are not available with this type of chain.

TAYLOR
MATERIAL HANDLING & CONVEYOR
Phone: 419-867-3560
www.taylormhc.com

Ideal for...

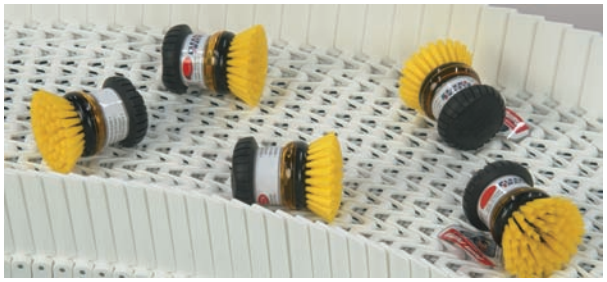

Irregular shapes

Bulk product

CA-MSG Specifications

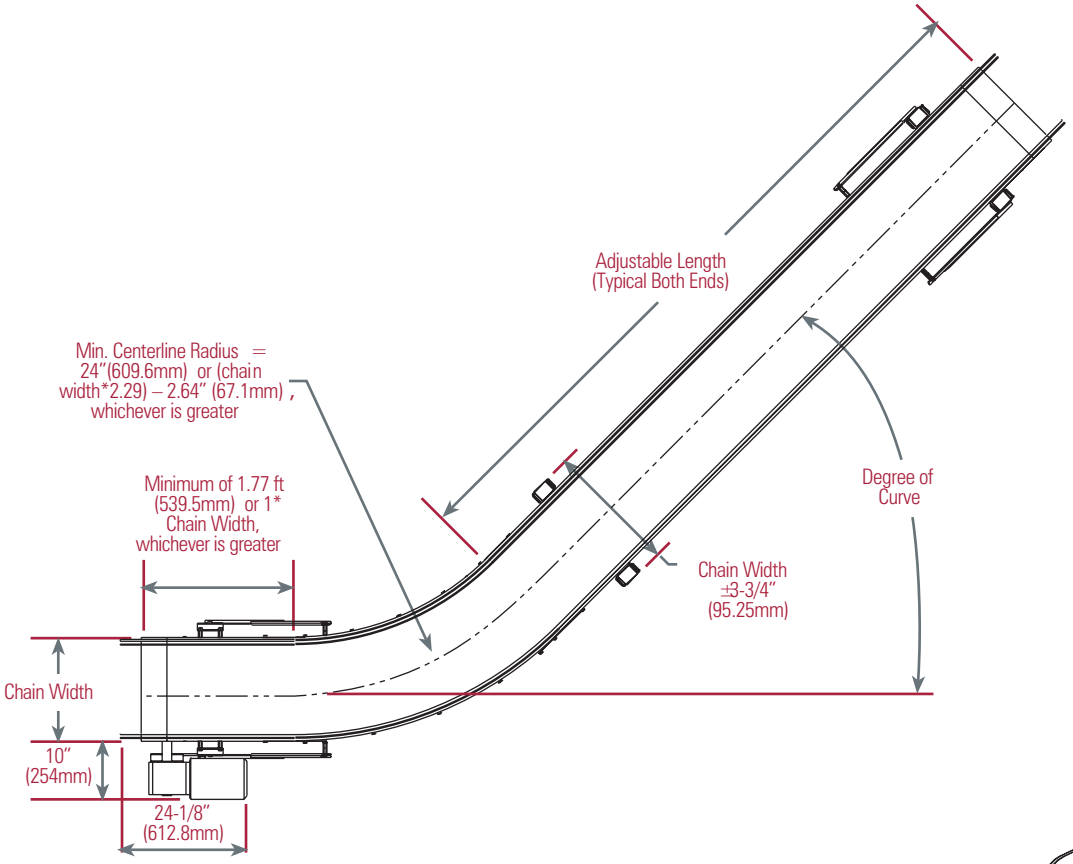

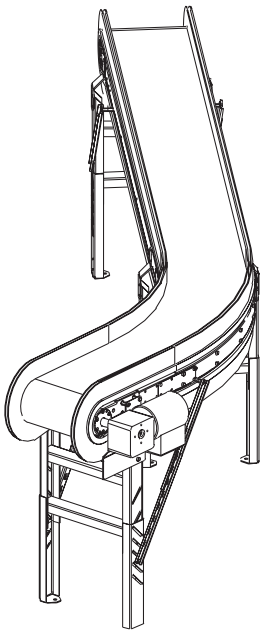

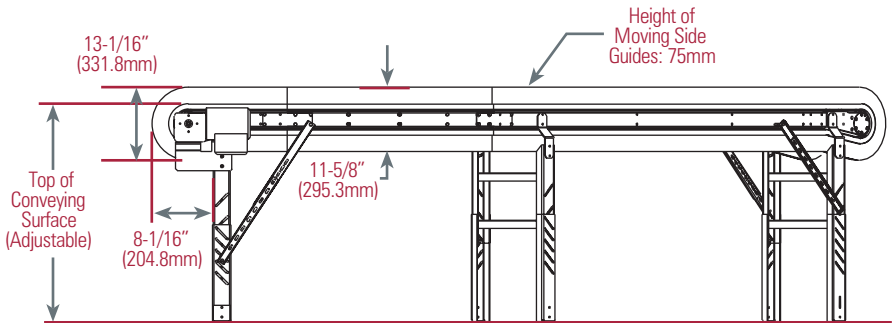

Drive Hand Location

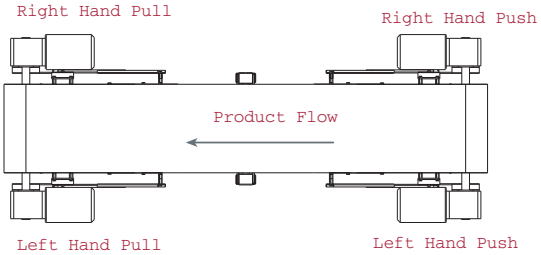

Note: Regardless of drive position the conveyor will

Options

Fixed Offset Guide Rail

Inside face of guide rail matches with edge of conveyor chain. The guide rail material is ultra-high molecular weight polyethylene with a galvanized steel back channel for durability. The guide rail comes in both 1.25 inch (31.8mm) and 2.25 inch (57.2mm) widths.

Gravity Transfer

This option permits transfer onto and off of the ends of the conveyor. These units lift out and are held in place by gravity as a safety feature to prevent objects from becoming lodged between the conveyor chain and the transfer rollers. The transfer uses small acetal rollers mounted on 4mm stainless steel rods. The unit is pitch adjustable from level to -15° at the discharge end and from +15° to level on the load end. See Transfer Guidelines chart for application guidelines.

Movimot® Speed Controller

This is a frequency inverter built into the conduit box of the drive motor, with no external wiring other than your incoming power lines. Movimot® provides you with the lowest cost method of controlling the speed of your conveyor. The unit is capable of 200 to 500 volts AC and has a frequency range of 20 to 80 hertz. The unit features an integrated potentiometer for setting acceleration and deceleration times. It is IP65 hose proof/dust proof enclosed.

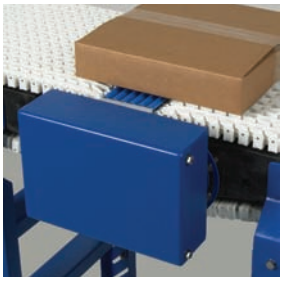

Slave Drive

The WhisperTrax Slave Drive unit is available for plain and raised style chains. This option allows two different conveyors to be driven by a single gear-motor. Consult a WhisperTrax representative for compatibility with your system.

Articulated Foot

Made of plastic with a steel reinforced core and non-slip pad attached to the underside of the foot, these feet provide a freestanding support for the conveyor frame. Foot option increases top of chain elevation 5" (127mm).

Caster

4" (100mm) diameter locking caster for mounting on the conveyor leg. As a safety limitation, not available on conveyors weighing more than 800 lbs. (364 kilos). Foot option increases top of chain elevation 5" (127mm). The maximum conveyor height is 47" (119.4cm) for casters.

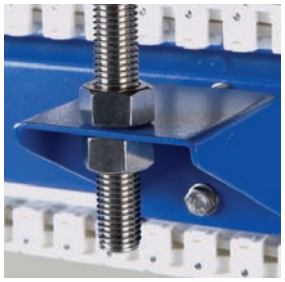

Ceiling Support Bracket

Painted mild steel brackets bolt to the side of the conveyor frame and support your system on 5/8" (15mm) hanger rods.

Options for CA-Series Conveyors

	Fixed Offset Guide Rail	Gravity Transfer	Movimot Speed Controller	Slave Drive Capable	Articulated Foot	Caster	Ceiling Support Brackets
CA-PLN	•	•	•	•	•	•	•
CA-RAS	•	•	•	•	•	•	•
CA-MSG			•		•	•	•

CA-Series Specifications

Dynamic Load Capacity (not to exceed 50 lbs. Per Linear Ft.)

Chart shows conveyors based upon 50 ft. total length.

Standard Conveyor @ 65 FPM

	3.76" Chain Width* Total Load			7.31" Chain Width Total Load			10.85" Chain Width Total Load		
H.P.	30º	45º	90º	30º	45º	90º	30º	45º	90º
1/3 hp	500-600 lbs	450-600 lbs	300-550 lbs	400-550 lbs	400-450 lbs	250-350 lbs	350-400 lbs	300-400 lbs	0-250 lbs
1/2 hp	700-850 lbs	650-850 lbs	500-600 lbs	700-950 lbs	650-800 lbs	450-700 lbs	650-750 lbs	600-750 lbs	400-600 lbs
3/4 hp	700-850 lbs	650-850 lbs	500-600 lbs	950-1100 lbs	850-1100 lbs	600-950 lbs	900-1050 lbs	800-1000 lbs	550-850 lbs

	14.39" Chain Width Total Load			17.94" Chain Width Total Load			21.48" Chain Width Total Load		
H.P.	30º	45º	90º	30º	45º	90º	30º	45º	90º
1/3 hp	300-350 lbs	250-300 lbs	0-150 lbs	0-250 lbs	0-250 lbs	N/A	N/A	N/A	N/A
1/2 hp	600-700 lbs	550-650 lbs	350-450 lbs	550-600 lbs	500-550 lbs	300-350 lbs	450-550 lbs	450-500 lbs	0-250 lbs
3/4 hp	800-950 lbs	750-900 lbs	500-750 lbs	750-900 lbs	700-850 lbs	450-600 lbs	700-850 lbs	650-750 lbs	400-500 lbs

Maximum Capacities vary depending on where the curve is placed in the conveyor: The chart shows a range of capacities for each conveyor which varies with the curve placement from one end to the other.

** Curve must be placed a minimum distance away from the end of the conveyor at (1*Chain Width) or 1.77ft, whichever is greatest.

* 3.76" chain width only available in PLN and RAS style chains

Dynamic Load Capacity (not to exceed 74 Kg per Linear Meter)

Chart shows conveyors based upon 20m total length.

Standard Conveyor at 20 meters/minute

	95.5mm Chain Width* Total Load			185.7mm Chain Width Total Load			275.6mm Chain Width Total Load		
H.P.	30º	45º	90º	30º	45º	90º	30º	45º	90º
1/3 hp	226-271 kg	203-271 kg	135-249 kg	181-249 kg	181-203 kg	113-158 kg	158-181 kg	135-181 kg	113 kg
1/2 hp	317-385 kg	294-385 kg	226-271 kg	317-430 kg	294-362 kg	203-317 kg	294-339 kg	271-339 kg	181-271 kg
3/4 hp	317-385 kg	294-385 kg	226-271 kg	430-498 kg	385-498 kg	271-430 kg	407-475 kg	362-453 kg	249-385 kg

	365.5mm Chain Width Total Load			455.7mm Chain Width Total Load			545.6mm Chain Width Total Load		
H.P.	30º	45º	90º	30º	45º	90º	30º	45º	90º
1/3 hp	135-158 kg	113-135 kg	67 kg	113 kg	113 kg	N/A	N/A	N/A	N/A
1/2 hp	271-317 kg	249-294 kg	158-203 kg	249-271 kg	226-249 kg	135-158 kg	203-249 kg	203-226 kg	113 kg
3/4 hp	362-430 kg	339-407 kg	226-339 kg	339-407 kg	317-385 kg	203-271 kg	317-385 kg	294-339 kg	181-226 kg

Maximum Capacities vary depending on where the curve is placed in the conveyor: The chart shows a range of capacities for each conveyor which varies with the curve placement from one end to the other.

** Curve must be placed a minimum distance away from the end of the conveyor at (1*Chain Width) or .8m, whichever is greatest.

* 95.5mm chain width only available in PLN and RAS style chains

CA-Series Transfer Guidelines

Model & Chain Type	Transfer Type	Smallest Diameter Product Recommended	Maximum Height Recommended	Decline Angle of Transfer	Conveyor Speed Tested	Weight Tested
CA-PLN	Plain with rollers	4.5" (114.3 mm)	9" (228.6mm)	6°	65 fpm	97.8 oz. (2774 g)
CA-RAS	Finger Transfer	1.5" (38.1mm)	1.25" (31.75mm)	10°	65 fpm	1.45 oz. (41 g)
CA-MSG	Transfer not available	X	X	X	X	X

Information based upon controlled environment and specific product.

Smallest Recommended Product Diameter For Chain Surface

CA-PLN	1" (25.4mm)
CA-RAS	1.125" (28.6mm)
CA-MSG	1" (25.4mm)

TAYLOR MATERIAL HANDLING & CONVEYOR
Phone: 419-867-3560
www.taylormhc.com

SpanTech

Span Tech LLC
1115 Cleveland Avenue
P. O. Box 369
Glasgow, Kentucky 42141
Phone: (270) 651-9166
general_info@spantechllc.com
www.spantechllc.com

©Span Tech LLC 2008