ENCLOSED TRACK WORKSTATION BRIDGE CRANES

SPANCO® Inc.

Promise to perform.

TAYLOR
MATERIAL HANDLING & CONVEYOR
Phone: 419-867-3560
www.taylormhc.com

WHY SPANCO?

1. We manufacture the widest selection of pre-engineered workstation bridge cranes in America.
2. We are always willing and able to custom engineer crane solutions for your unique applications. Our business model readily handles ***one-of-a-kind*** design challenges.
3. Our engineers do comprehensive finite element analysis and destructive testing when required.
4. All of our enclosed track bridge cranes and monorails – including custom engineered models – meet or exceed standards set by:
   - ANSI B30.11 Standards for Monorails and Underhung Cranes
   - Monorail Manufacturers Association (MMA) MH27.2 Standard for Enclosed Track Underhung Cranes and Monorails Systems – Specifications
5. We deliver exceptional weld quality. In 2011, we earned AWS's prestigious Certified Welding Fabricator (CWF) designation for our comprehensive quality management systems that oversee our welding fabrication.
6. Our laser precision manufacturing assures you that your bridge crane will operate smoothly for years to come.
7. We've embraced ISO 9001:2015 quality standards as a means to monitor the quality of our products and interactions with customers, dealers, and reps.
8. All system proposals begin with an on-site evaluation of your material handling needs and expert recommendations by our trained Spanco dealers.
9. We engineer and manufacture a full portfolio of lifting solutions – from jib cranes to gantry cranes – so you can be assured that all of our system recommendations will be guided by your application's best interests.
10. Our bridge cranes are delivered on-time and in the most protective packaging in the crane industry.
11. Our dealers give you on-going, on-site technical support.
12. Our bridge cranes are backed by the best warranties in the industry: Ten years for all systems and one year for motorization components.
13. All standard Spanco systems are designed to comply with IBC seismic requirements for use in all locations of the lower 48 states, including all parts of California and Oregon.

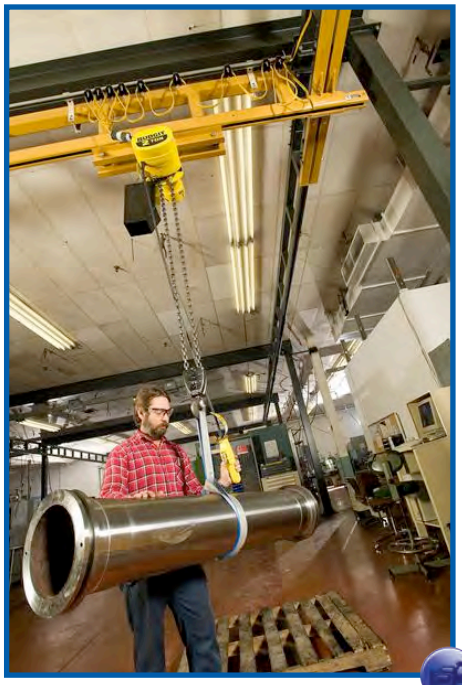

A 4000-pound capacity Spanco Freestanding Bridge Crane carefully lifts and moves an expensive machined part.

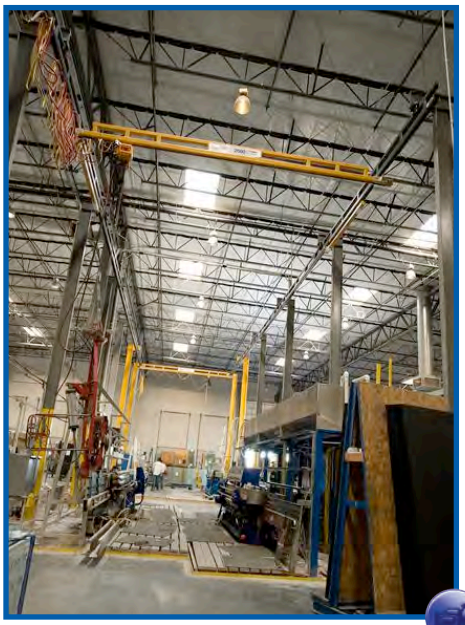

A custom-engineered 2000-pound capacity Spanco Freestanding Bridge Crane designed for a glass manufacturer.

MMA Monorail Manufacturers Association — Workstation Cranes and Patented Track Systems

MHI Member Company

NOTE: *the video icon in this brochure means you can see this crane in action at Spanco.com*

SPANCO
WORKSTATION

BRIDGE CRANE TABLE OF CONTENTS

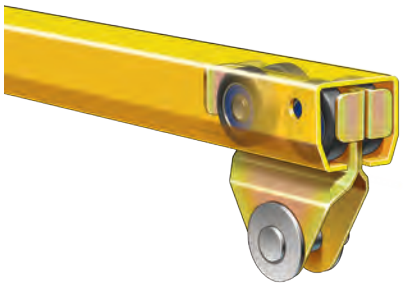

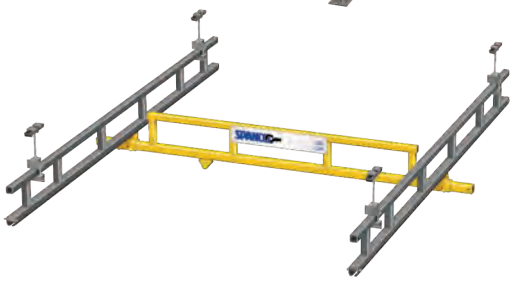

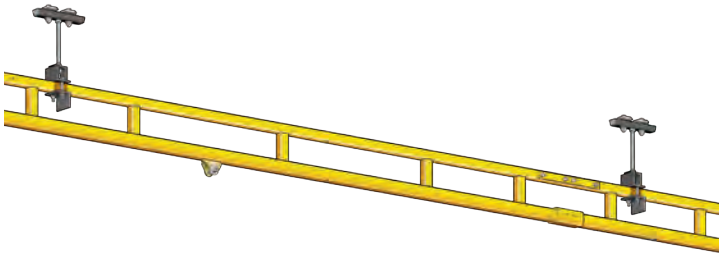

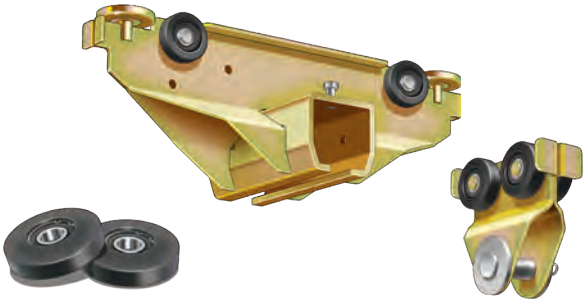

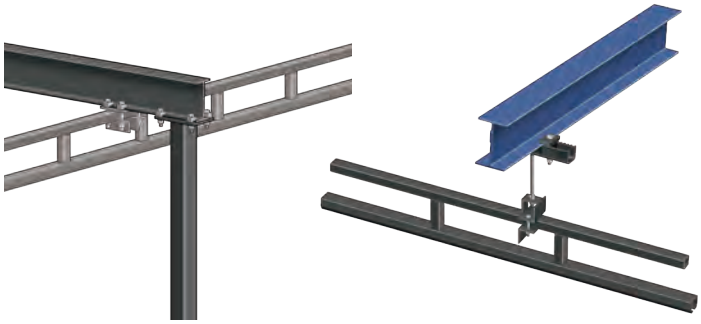

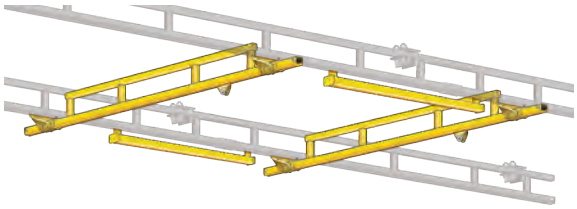

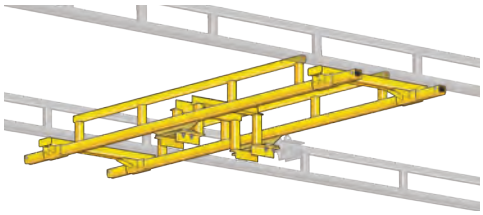

WORKSTATION
BRIDGE CRANES

WHY USE WORKSTATION BRIDGE CRANES?

Add Overhead Crane Efficiency to Your Entire Production Line

An example of the enormous coverage area possible with Spanco Bridge Cranes. In this case, one freestanding system provides overhead lifting for virtually every workstation in the shop.

Do your workers need to move heavy or large items from one work area to another? Are forklifts and conveyors proving to be too awkward, slow, or hazardous for these tasks?

With a Spanco® Workstation Bridge Crane, employees can move loads up to 4000 pounds quickly and easily.

Our bridge cranes' rectangular-shaped coverage areas can handle a cluster of workstations, your entire production line, or even your entire building. Our bridge crane runways are designed with cantilevers on both ends to extend beyond the center of your last column or hanger and allow you to easily add on to your current system.

- Eliminate manual lifting, empowering a single worker to move loads
- Supplement or replace multiple jib cranes and/or forklifts
- Provide smooth, lightweight, ergonomic movement

Nameplate Capacity

Design Factors

- Nameplate bridge capacity represents the rated load on the hoist hook. The load rating of a hoist shall not exceed the bridge rating.

Spanco's design includes an allowance of 15% of nameplate capacity for dead weight of the trolley and hoist. An additional allowance of 25% of nameplate capacity is also included for impact.

Service Factors

All Spanco workstation cranes are designed for frequent usage as defined by the Monorail Manufacturers Association (MMA):

- System or equipment is used where operational time is up to 100% of the work period, and lifted load is at 50% or below rated capacity.
- System or equipment is used where operational time is less than 50% of work period, and lifted load is greater than 50% of rated capacity.
- Applications involving vacuums, magnets, or other high-impact lifters are considered severe usage. See following page for more information.
- Consult factory for usage other than moderate and all instances of high-cycle rates or high-impact applications.

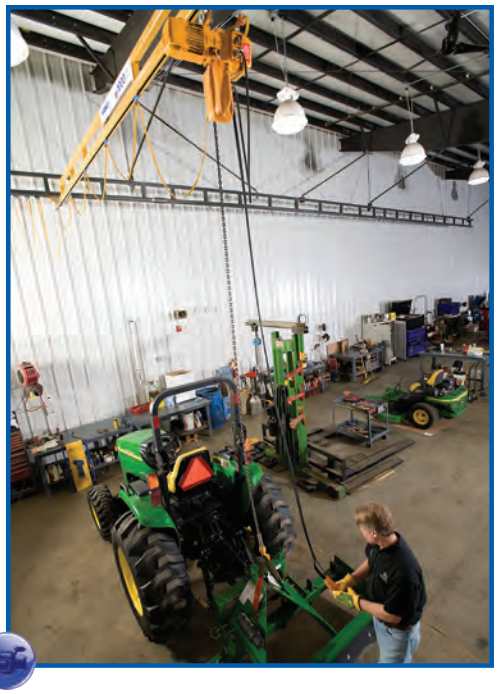

A John Deere dealership replaced a jib crane and forklifts with a Spanco Ceiling-Mounted Bridge Crane that covers their entire service area.

A coupling manufacturer installed several 4000-pound capacity Spanco Freestanding Bridge Cranes to allow workers to move heavy loads from one work area to another with precision and accuracy.

WORKSTATION BRIDGE CRANE REQUIREMENTS

High-Impact Lifting Systems Protocol

Applications involving vacuums, magnets, or other high-impact lifters are considered severe usage (continuous service) per the Monorail Manufacturers Association (MMA) and may require special design considerations. See below.

- **Magnet lifting systems** require the system capacity to be derated by 50%.
- **Vacuum lifting systems that use an electric hoist** never require the capacity to be derated.
- **Vacuum lifting systems that use vacuum hose trolleys** require the system to be derated by 50% if the system has any of the following attributes. Please contact Spanco with any questions about the system attributes below.
  - The operational time (system is in motion) is consistently greater than 50% of the work period and the lifted load is consistently greater than 50% of the rated capacity.
  - The equipment performs 20 to 40 lifts per hour.
  - The average lift is 15 feet or more.

    NOTE: Applications that exceed 40 lifts per hour can be problematic due to unusually high-cycle rates. If an application exceeds 40 lifts per hour, please provide as much information as possible about the lifting process and the item(s) being lifted.

Vacuum lifting systems that use vacuum hose trolleys and do not have any of the system attributes listed above do not require the system capacity to be derated.

System Requirements

- All ceiling-mounted systems using drop rods require bracing provided by others to building steel for lateral and longitudinal stability. To achieve desired rigidity for an application, Spanco recommends consulting a professional engineer in your area to satisfy all local codes and ordinances.
- All freestanding systems require four 3/4-inch diameter anchor bolts, provided by others, per column.
- For all systems, hoists are not included and are provided by others.

HIGH PERFORMANCE ENCLOSED TRACK

Three Times Easier to Operate

At the heart of our bridge cranes are our smooth-running trolleys and enclosed track – making Spanco® systems three times easier to operate and control than patented track systems.

For example, an operator moving a 1000-pound load only needs to use about 10 pounds of force to start its movement and 8 pounds of force to continue its travel. With a 100 to 1 ratio, virtually any of your employees can move heavy materials with ease.

Not only is manual operation easy, it can be much faster than motorized cranes. (But if you're regularly moving 1000-pound loads, or if you can't walk beside your load due to workplace obstacles, a Spanco TrackBoss™ Tractor Drive offers power travel for your trolley. See page 24.)

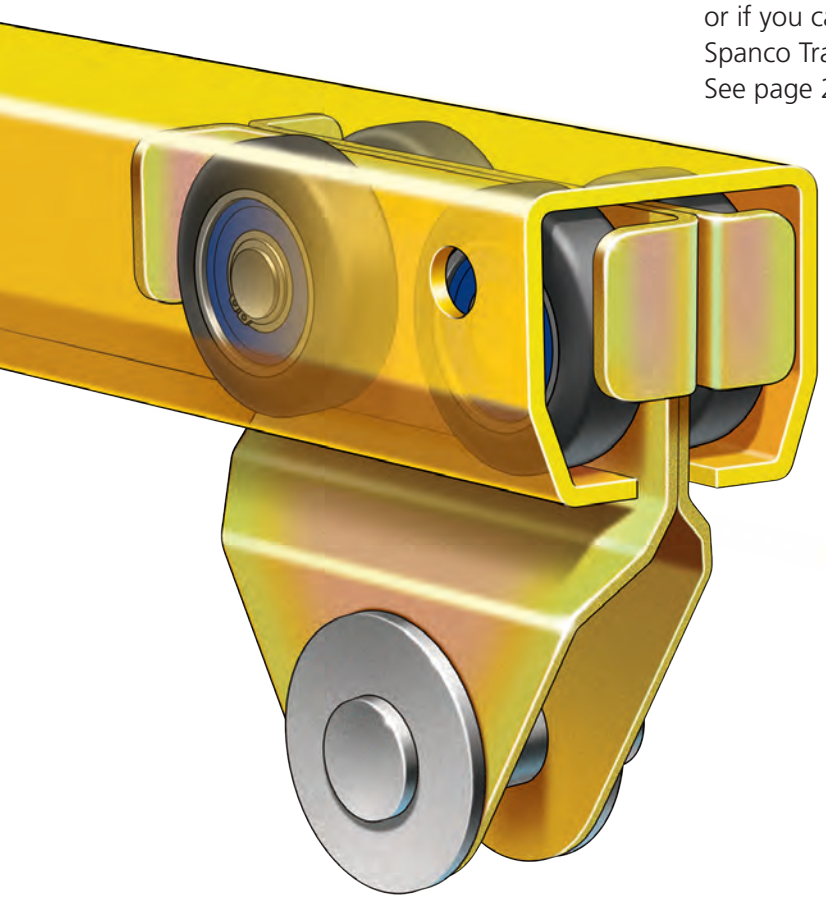

End profile of track with trolley wheel; design provides self-centering and self-cleaning

The Spanco V-shaped profile prevents dust, debris, and ice from accumulating on the track. The self-cleaning V-shape also maintains wheel alignment for end trucks and trolleys, so they always glide effortlessly. Plus, the enclosed track continuously protects wheels and ensures minimum friction.

End view of the profile of a trussed track. This 250-pound capacity Spanco Ceiling-Mounted Bridge Crane is used with a vacuum lifter at a flour packaging plant.

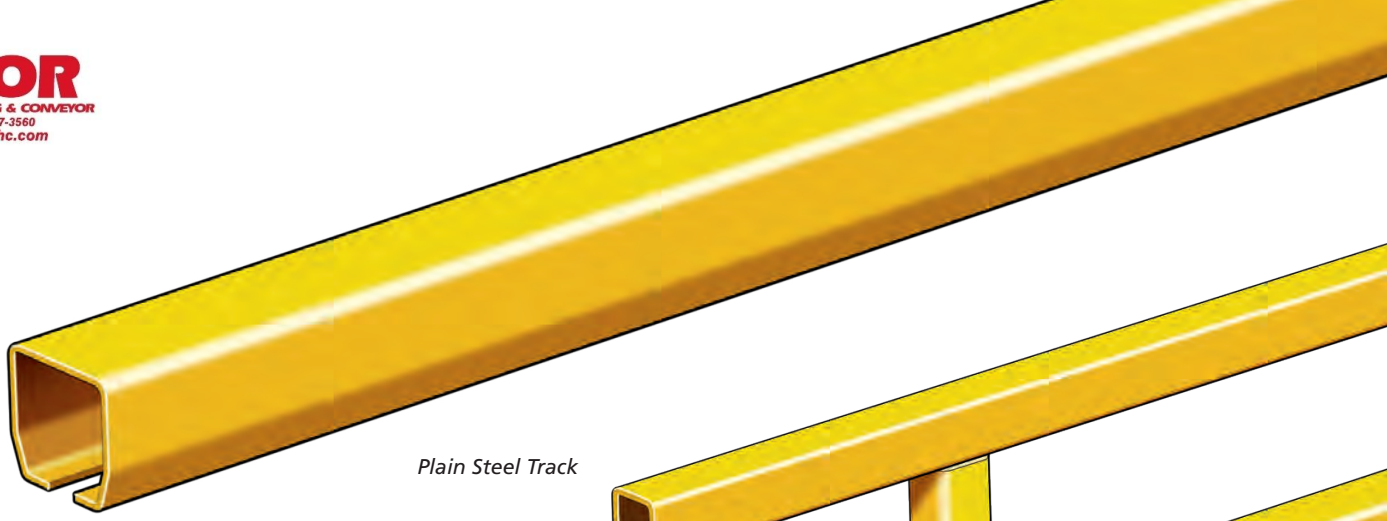

Plain Steel Track

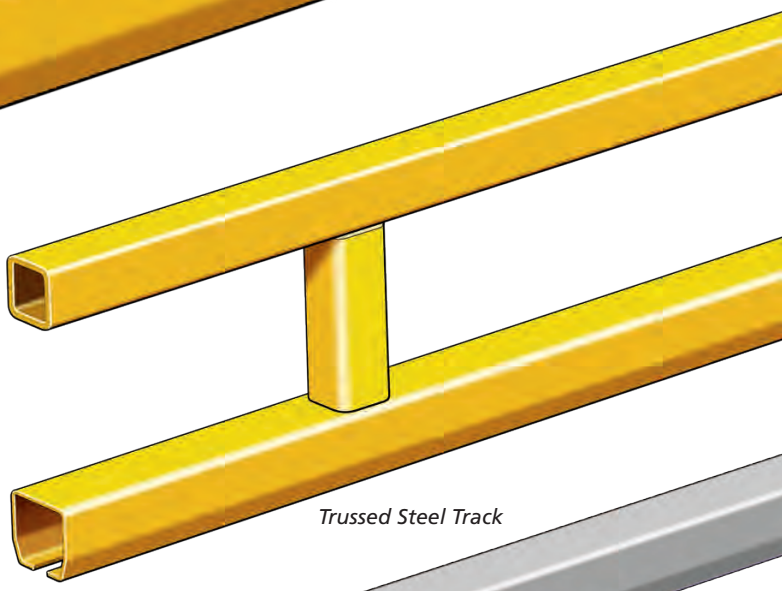

Trussed Steel Track

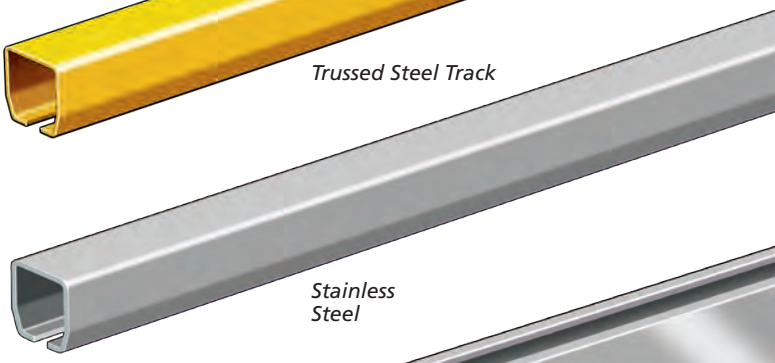

Stainless Steel

Alu-Track

Plain Steel Track has the lowest profile; for use with short spans.

Trussed Steel Track spans greater distances between supports. The combination of high-strength to low-weight ratio reduces stress on the support structure.

Track Options

- Alu-Track® high performance runways and bridges: see pages 15-17
- Steel Track: rolled from ASTM A572, A607, or A715 grade steel; available with enamel, powder, epoxy, or galvanized coatings
- Stainless Steel Track: 304 stainless for 500 Series track
- Mylar™ Lip Seal: for additional track protection from very heavy dust or paint overspray applications

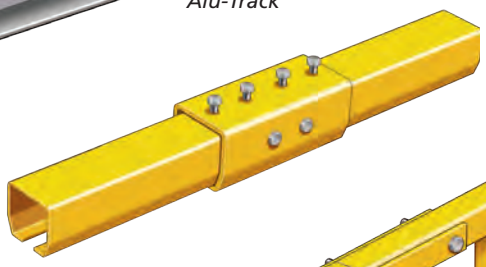

Single Track Splice

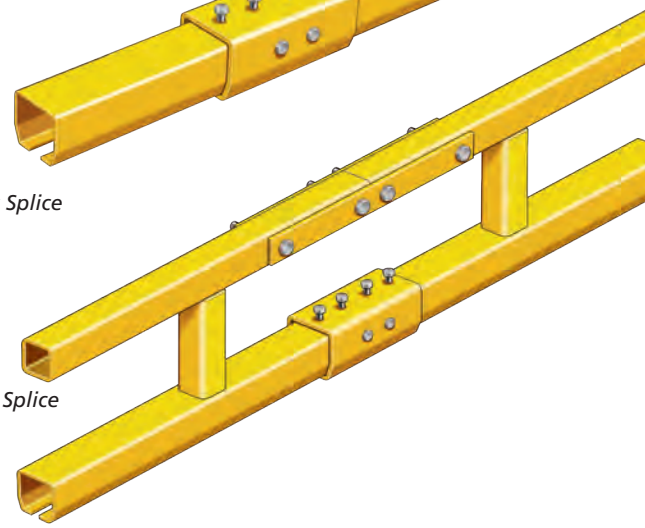

Trussed Track Splice

Easily install, expand, or relocate

your bridge crane at any time. By simply adding runway sections and additional bridges, your system grows and adapts to your changing production needs. Splice Joints connect the track sections and come with vertical and horizontal adjustment screws for precise alignment of the track sections. Trussed Splice Joints connect the top chord of the truss, linking track sections with precise alignment.

FREESTANDING
BRIDGE CRANES

INSTALL ALMOST ANYWHERE

Spanco® Freestanding Workstation Bridge Cranes provide highly effective, cost efficient lifting and moving solutions, especially when:

- You need flexibility: these bolt-together freestanding systems can be easily relocated, either within your plant or in an entirely new location.
- Your roof support is inadequate for a Spanco Ceiling-Mounted Bridge Crane. Typically, a standard 6-inch thick reinforced concrete floor is all that's needed for our freestanding systems.
- You do not want a system that has to attach to your building's support columns.
- You need the flexibility to readily add runway lengths and bridges – or extend your coverage to multiple work areas – at any time.

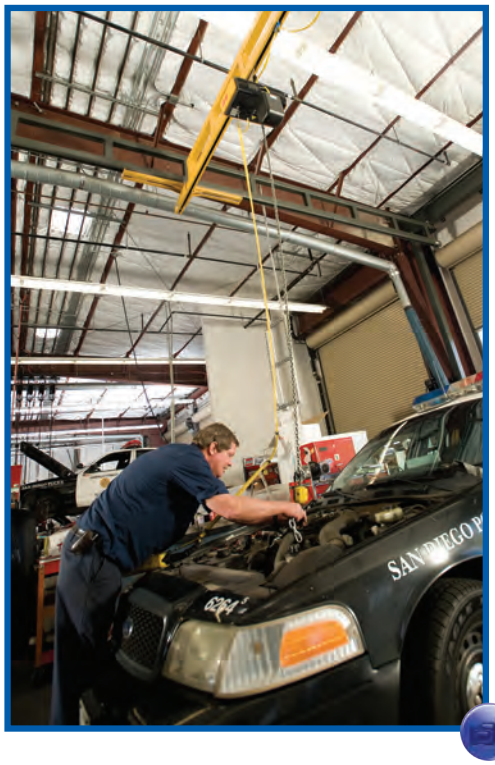

This police garage can do major maintenance tasks much easier now with a 2000-pound capacity Spanco Freestanding Bridge Crane.

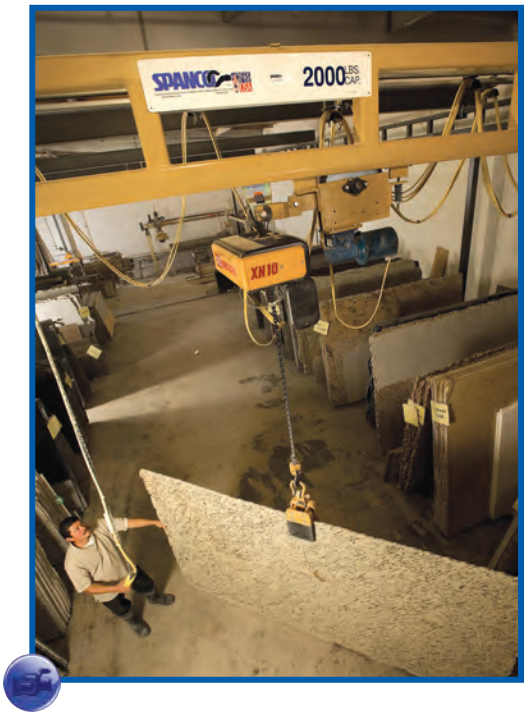

Storage and retrieval of granite countertops is a one-man task using this 2000-pound capacity Spanco Freestanding Bridge Crane.

TAYLOR
MATERIAL HANDLING & CONVEYOR
Phone: 419-867-3560
www.taylormhc.com

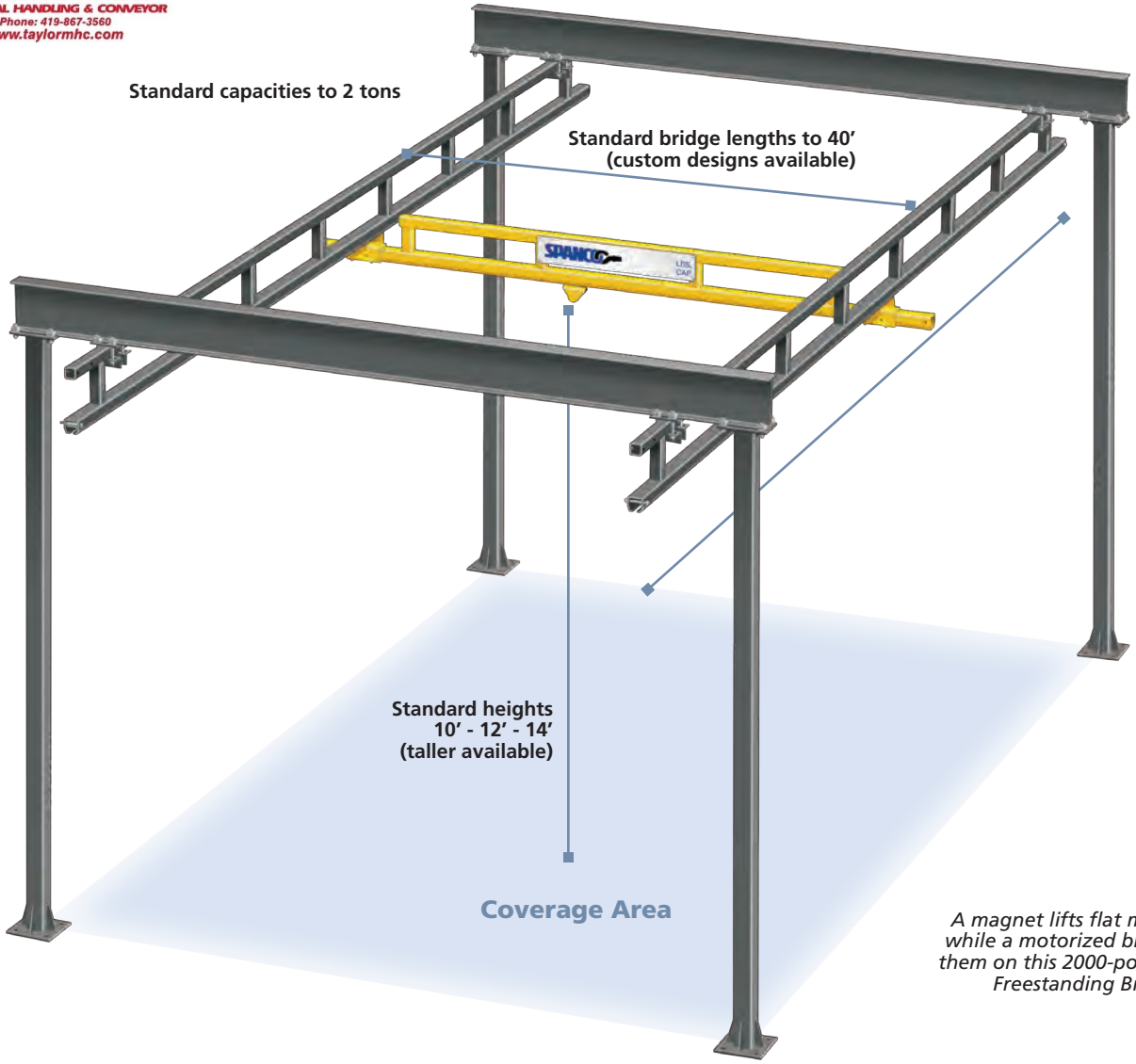

A magnet lifts flat metal plates, while a motorized bridge moves them on this 2000-pound Spanco Freestanding Bridge Crane.

SPANCO FREESTANDING BRIDGE CRANES

Capacities: 250 to 4000 lbs.

Bridge Lengths: (Overall) 34' Standard; available to 40'

Runway Support Centers: 40' Standard

Runway Lengths: Unlimited with splicing; 53' without splicing

Height: (Floor-to-Trolley Clevis) 10', 12', or 14' heights (taller available)

WORKSTATION BRIDGE CRANE COMPONENTS

SUPERIOR COMPONENT ENGINEERING

End Stop Bumper

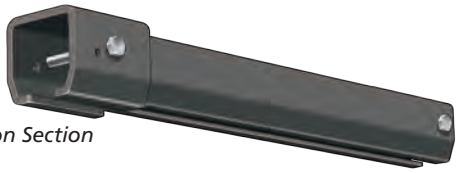

Festoon Section

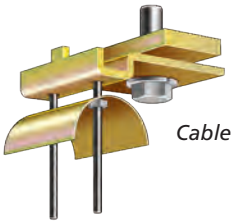

Cable/Hose Clamp

Cable/Hose Trolley

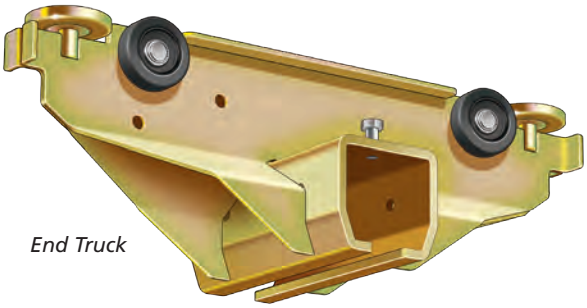

End Truck

Hoist Trolley

1 **End Stop Bumpers** with resilient rubber casings for increased impact resistance. Bumpers are through-bolted to the enclosed track and are provided with all systems.

2 **Festoon Sections** are through-bolted onto an end of a runway to allow stack-up of cable/hose trolleys. Festoon trolleys pass under the through-bolt and into the festoon section.

3 **Cable/Hose Clamps** attach to one end of the runway (the festooning section) and one end of the bridge. Standard clamp accommodates flat cable, 4 wire, #14 AWG. Optional clamps hold 3/8-inch air hose.

4 **Cable/Hose Trolleys** convey flat electrical cable or round air hose. Four wheels insure easy rolling. Pivoting clevis provides swiveling action for air hose. Maximum air hose capacity for standard trolleys is 1/2 inch; special trolleys available for larger festooning.

5 **Flat Cable Festooning Systems** (4 wire, #14 AWG) are supplied with all bridge crane systems. Festoon loops are 18 inches for bridges and 36 inches for runways. Standard festoon trolleys are either air hose or electric festooning available in various sizes.

6 **End Trucks** carry the bridge along the runways. Horizontal steel guide rollers guard against *crabbing* of the workstation bridge crane.* (Standard zinc dichromate finish)

7 **Hoist Trolleys** are fabricated from precision-cut steel plate.* (Standard zinc dichromate finish)

End Trucks and Hoist Trolleys both have quiet, long-lasting, large diameter, polyamide wheels equipped with anti-friction ball bearings. Other available options include steel wheels or bronze wheels with bronze guide rollers for* **spark resistant *applications.*

Hanger Assemblies:

A For ***Spanco Ceiling-Mounted Systems***, threaded rod hangers are standard, with flush-mount hangers available; see page 23 for more information.

B For ***Spanco Freestanding Systems*** (as shown here), flush type hangers allow for lateral and longitudinal adjustments.

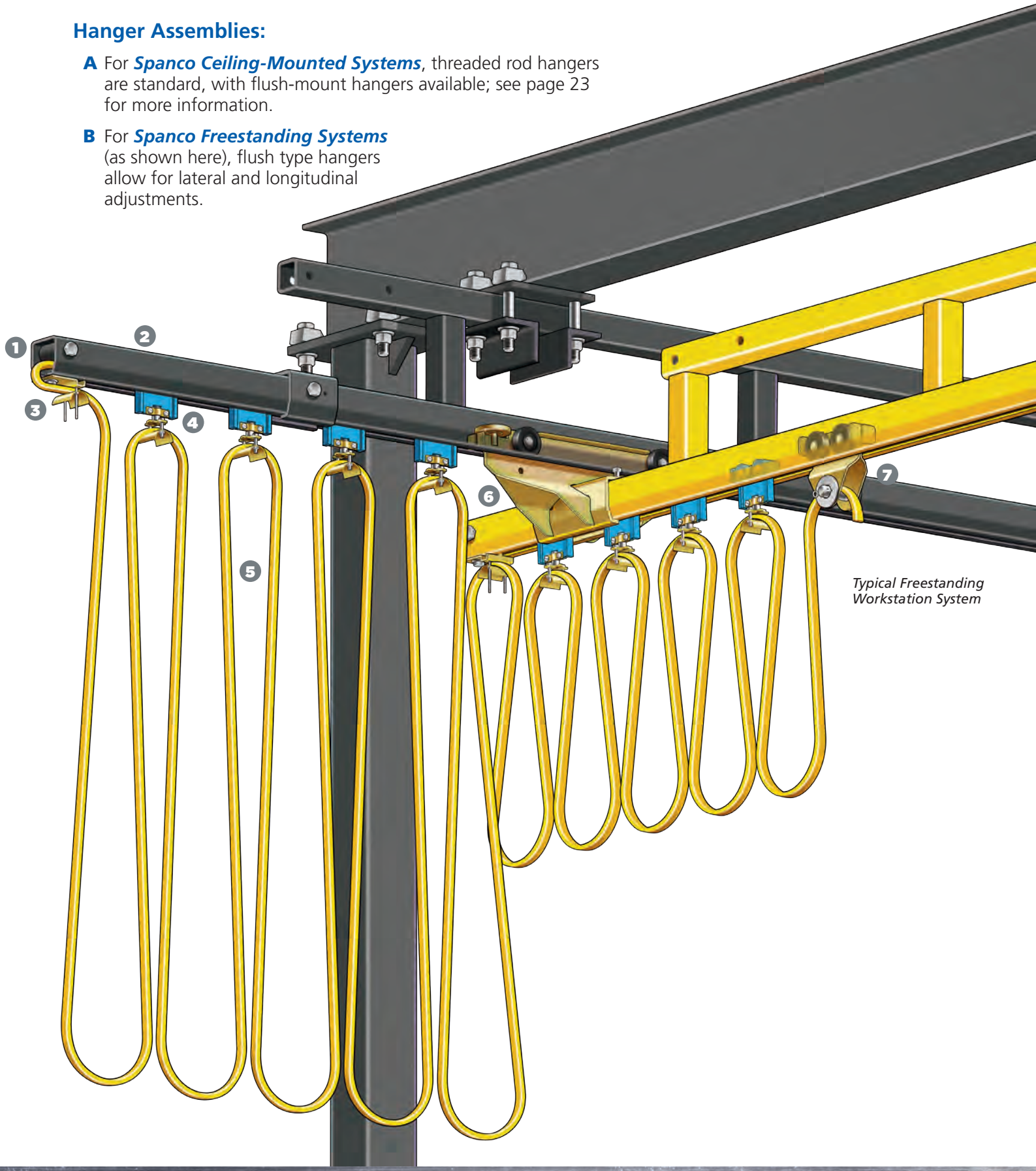

Typical Freestanding Workstation System

WORKSTATION BRIDGE CRANE SUPPORT SYSTEMS

Freestanding System

FREESTANDING

Freestanding systems are easily installed with the aid of a forklift. Welded steel base plates with gussets provide solid mounting connections between our steel support columns and your concrete floor. All support columns are designed to AISC specifications. All standard Spanco® systems are designed to comply with IBC seismic requirements for use in all locations of the lower 48 states, including all parts of California and Oregon.

An agricultural equipment manufacturing operation using a freestanding workstation bridge crane with runways supported by steel columns.

TAYLOR
MATERIAL HANDLING & CONVEYOR
Phone: 419-867-3560
www.taylormhc.com

CEILING MOUNTED

Standard Threaded Rod Hangers

Spanco Standard Threaded Rod Hanger assemblies are provided with all Ceiling-Mounted Bridge Cranes and Monorail Systems:

- Spanco recommends consulting a local professional engineer to satisfy all local codes and ordinances and to determine your building support adequacy. Considerations include your geographical region, snow fall, seismic loading, etc.
- Adjustable roof beam clamp for secure fit to horizontal beams. Accommodates flange widths from 2-¼ inches to 8 inches and flange thicknesses from 1/4 inch up to 7/16 inch. Upon request, alternative clamps can be provided for larger beams or for beams sloped up to 14 degrees.
- Standard 12-inch threaded rod provided, with longer rods available in 12-inch increments. Threaded rods can be custom cut on-site as needed. **NOTE:** Runway spans 20 feet or more require anti-buckling hangers.
- Requires sway bracing (see below).
- All threaded rods are made from Grade B7 material.

Trussed Track Drop Hanger

Sloped Hangers with Drop Rods

Sway Bracing for Standard Hangers

- Sway bracing is required on all threaded rod supported systems to ensure maximum runway rigidity and optimum end truck performance.
- Our optional sway brace bracket attaches to our standard rod and track clamp. The bracket holds a one-inch diameter schedule 40 pipe at a 45-degree angle. The pipe is not supplied by Spanco.

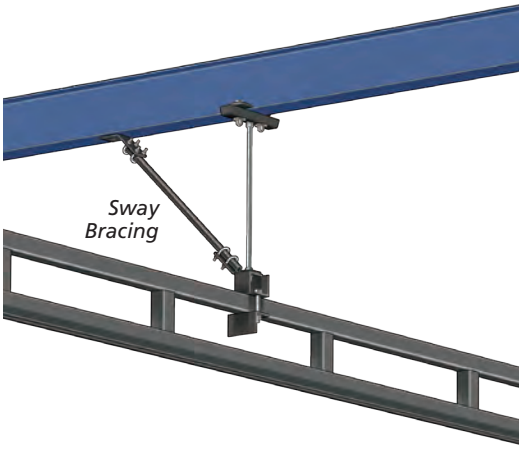

Sway Bracing

Flush Clamps for Mounting Runways

- Optional hanger assembly for attaching plain track runway to support steel. Fabricated from structural plate and equipped with two Grade 5 bolts and beam clips.
- Accommodates flange widths from 2-¼ inches to 8 inches and flange thicknesses from 1/4 inch up to 7/16 inch. Larger flange widths and thicknesses available.
- **NOTE:** check that your bridge's intended use will leave sufficient overhead clearance. For example, equipment or hoses rising above the bridge may not clear your support beam.

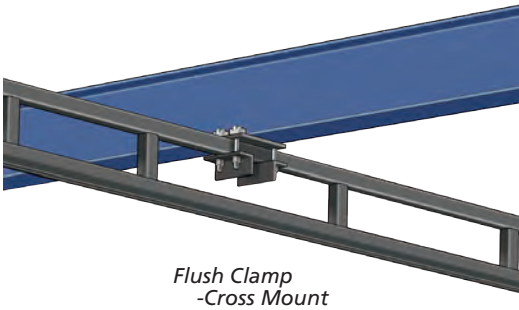

Flush Clamp -Cross Mount

Flush Clamp for cross mounting plain track runways

Flush Clamp -Parallel Mount

Flush Clamp for parallel mounting plain track runways

Compatible with plain, trussed, and Alu-Track® bridges.

WORKSTATION BRIDGE CRANE SYSTEM OPTIONS

Mixed Capacity Systems leverage system capability by specifying heavier capacity runways with multiple smaller capacity crane bridges.

For example: a 2000-pound capacity runway can hold two 1000-pound capacity crane bridges, or four 500-pound capacity crane bridges.

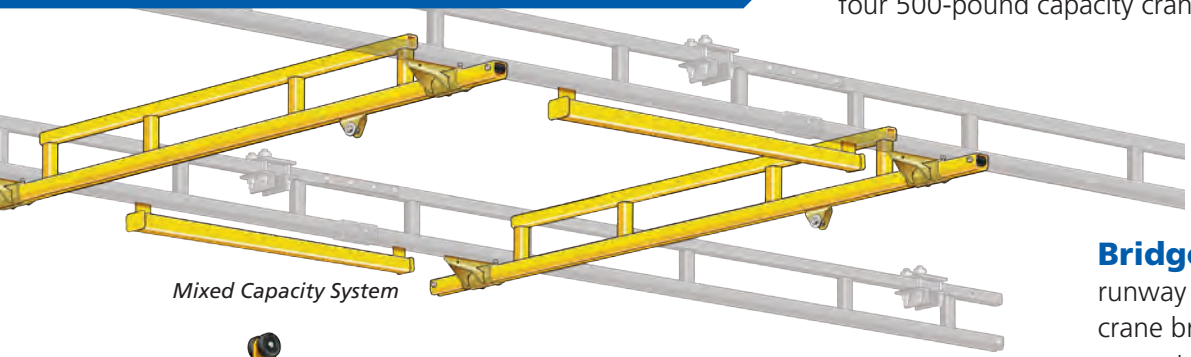

Mixed Capacity System

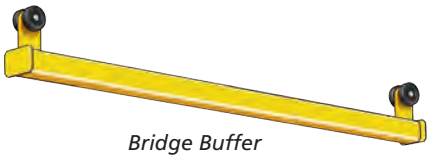

Bridge Buffer

Bridge Buffers roll in the runway tracks between two crane bridges. This keeps them separated to avoid overloading the runway's capacity.

TrackBoss™ Tractor Drives motorize the travel of your hoist trolley or bridge crane. Typically specified when loads regularly exceed 1000 pounds. These drives are also extremely helpful when transporting material into hard-to-reach areas where operator movement is difficult due to machinery, work tables, or other obstacles.

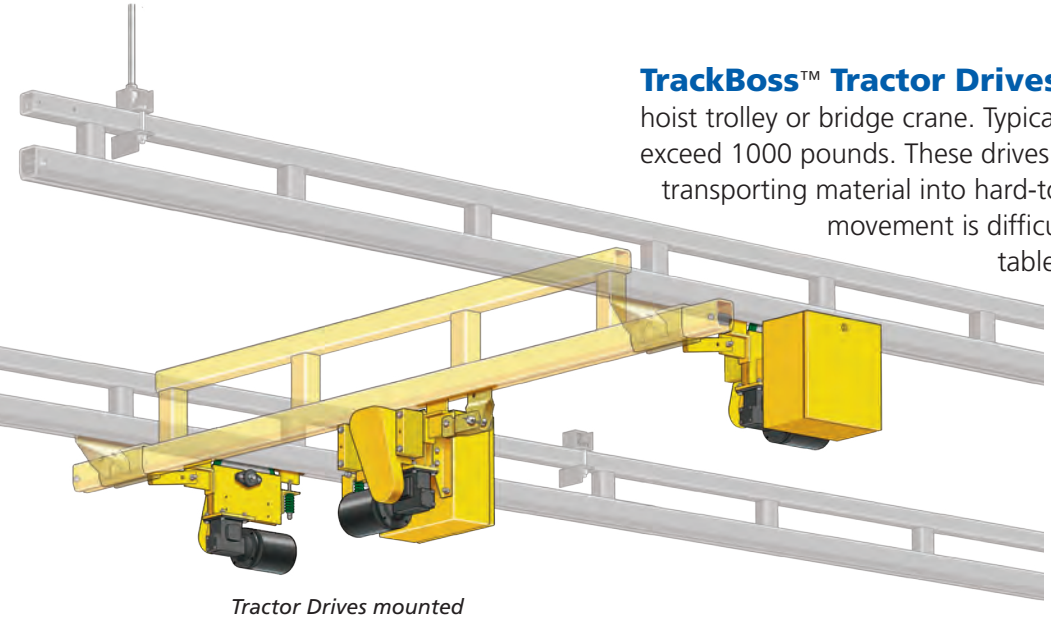

Tractor Drives mounted on bridge and runways

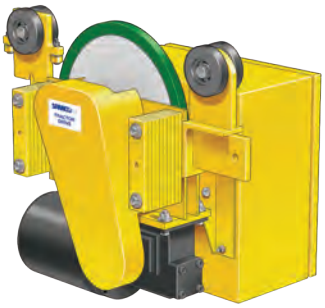

TrackBoss Tractor Drive

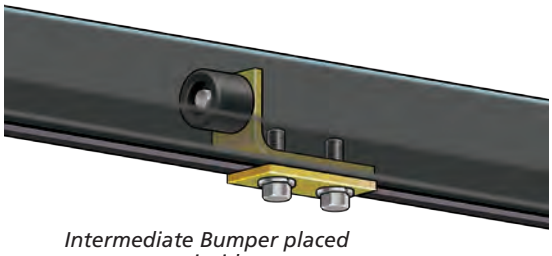

Intermediate Bumper placed inside a runway

Intermediate Bumpers are frictionally attached on runways to prevent more than one bridge crane from operating within a set of support centers.
NOT TO BE USED AS END STOPS.

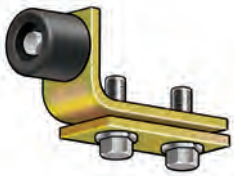

Intermediate Bumper

TAYLOR
MATERIAL HANDLING & CONVEYOR
Phone: 419-867-3560
www.taylormhc.com

TAYLOR
MATERIAL HANDLING & CONVEYOR
Phone: 419-867-3560
www.taylormhc.com

Double-Girder Nested Trolleys, also know as High Hat or Crab Trolleys, increase the available lift height in low headroom applications. The hoist is nested between dual girders that form a box-shaped assembly that rises above a set of parallel, connected bridges.

Double Girder End Trucks

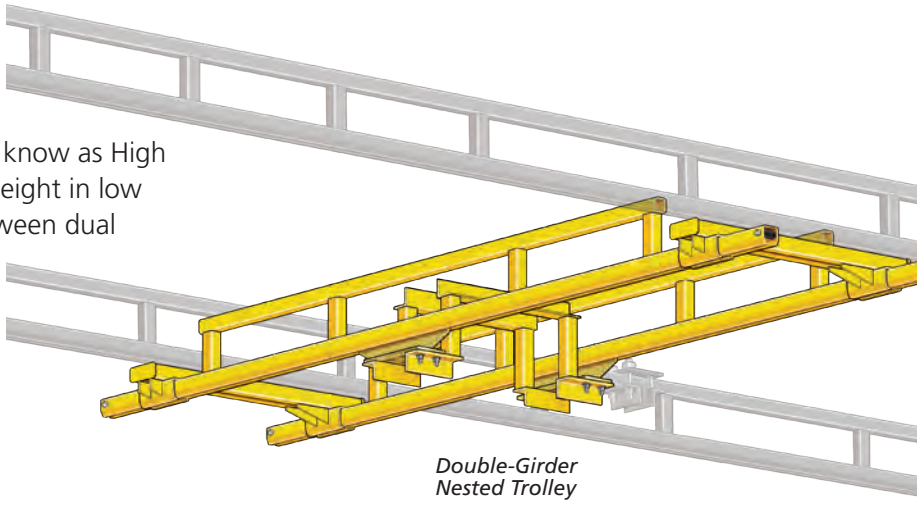

Double-Girder Nested Trolley

Box Tracks allow festooning cables/ hoses to run in their own box track, typically positioned out-of-the-way, above the runway or bridge.

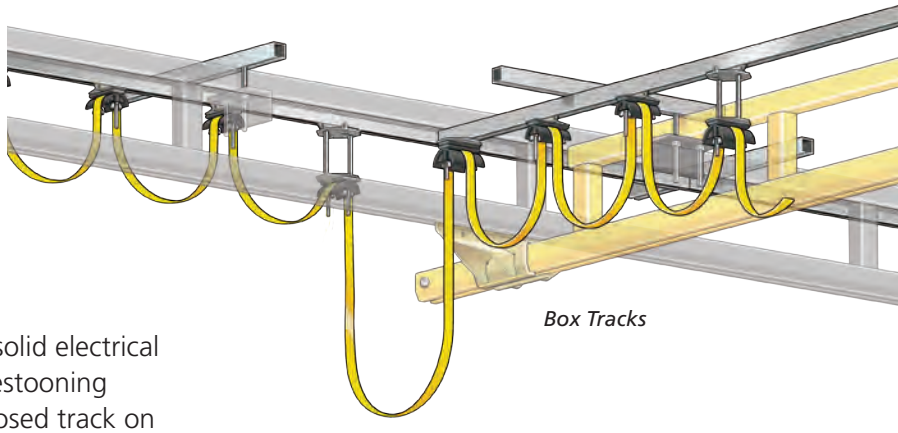

Box Tracks

Duct-O-Bar™ * Electrical Connections use a solid electrical bar and brushes in conduit as an alternative to festooning cables. The connections run adjacent to the enclosed track on runways or bridges.

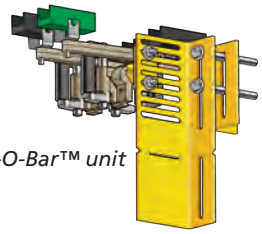

Duct-O-Bar™ unit

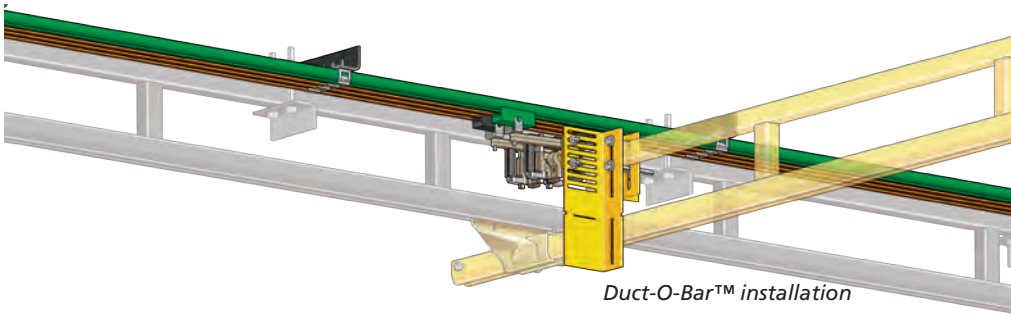

Duct-O-Bar™ installation

Vacuum Hose Trolleys provide effortless movement of vacuum hoses. Features anti-kick-up rollers and Velcro straps to festoon hose for vacuum lifters.

***NOTE:** Systems using vacuum hose trolleys require the system capacity to be derated by 50 percent. See page 7 for more information.*

***NOTE:** Vacuum hose trolleys are size and system specific.*

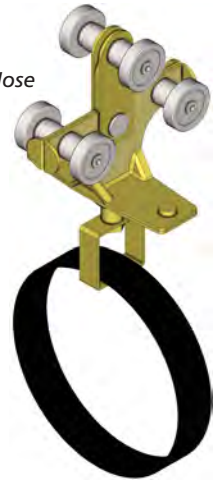

Vacuum Hose Trolley

Steel Wheels for trolleys and end trucks are also available with zinc dichromate-plated finish or stainless.

Steel Wheels

Bronze Wheels for trolleys and end trucks feature bronze guide rollers for ***spark resistant*** applications.

Bronze Wheels

**Duct-O-Bar is a trademark of the Duct-O-Wire Company.*

WORKSTATION BRIDGE CRANE SYSTEM OPTIONS

Telescoping Bridge reaches under doorways and around columns.

EXTENDED CRANE COVERAGE

For bridge cranes that extend beyond your runways, we can engineer systems using the following designs:

Telescoping Bridges: provide extended crane reach, allowing you to easily place parts into machinery or into a neighboring workstation or bridge crane system. The telescopic bridge cranes also allow you to reach beyond support columns and under mezzanines.

Anti-kick-up wheels keep the telescoping bridge's movement smooth, even when carrying up to 2000 pounds. Spanco® Telescoping Bridges use steel wheels that provide effortless travel and an easy lifting experience. Visit Spanco.com to watch our telescoping bridge in action!

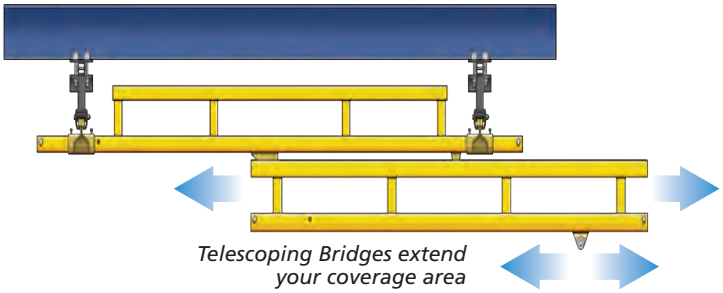

Telescoping Bridges extend your coverage area

Bridge-Mounted Articulating Jib Crane

Bridge-Mounted Articulating Jib Crane

An articulating jib crane can be mounted to a workstation bridge to provide extended reach beyond runways and to move loads around obstacles or into machinery. Spanco Bridge-Mounted Articulating Jib Cranes also provide 360-degree rotation and extensive headroom and clearance–both below and above the boom. These articulating jibs can support nearly any type of manipulator, balancer, or hoist.